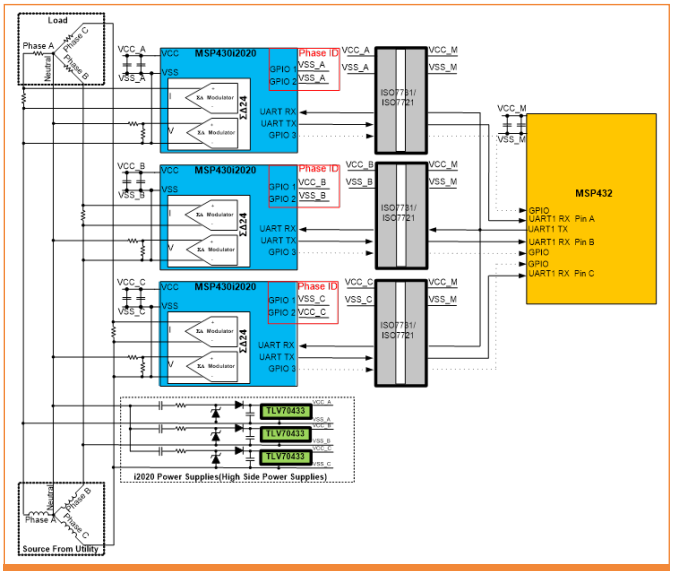

Figure 4. Isolated shunt sensors using a metrology AFE

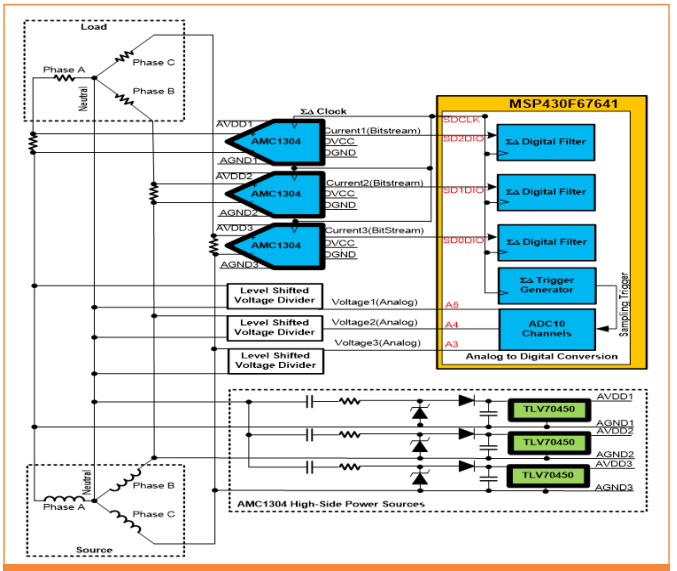

Figure 5. Shunt sensors using isolated modulators

from communication between the shunt sensing device and the back-end device.

The second approach is to have the shunt sensing device essentially only sense current and have the back-end device perform the metrology calculations, allowing easier parameter calculations between phases. Figure 5 shows this: an approach implemented in the *Magnetically Immune Transformerless Power for Isolated Shunt Current Measurement Reference Design.*

Intrusive tampering

1. Bypassing the current

One of the most common intrusive methods is to push a metal object against the terminal block of the e-meter (Figure 6). This metal forms a current divider with the current sensing circuitry, which causes the metal object to bypass the current. Thus, the sensing circuitry registers less current than is actually consumed, leading to a smaller active energy reading. Since customers are billed on active energy, this means a less-expensive utility bill.

To deal with current-bypass tampering, a design can measure both the line and neutral current of a system, which ideally should both equal the current drawn by the customer's load for a single-phase system.

If someone tries to bypass the line current, it would still be possible to accurately calculate the active energy by adding a current transformer current sensor between the neutral terminals and performing metrology calculations using the neutral current instead of the line current.

2. Disabling an e-meter's power supply

Another method is to disconnect one of the neutral or line leads. Removing one of these leads disables the e-meter's power supply, as well as the sensing of the mains voltage necessary for an accurate active energy calculation. To deal with a potentially unavailable mains-powered supply, a backup supply, such as a parasitic current transformer-based supply, a supercapacitor or a battery-based supply can power the meter if the primary power supply, is nonfunctional.

3. Reversing energy meter readings

A third intrusive technique is to reverse either the line or neutral connections. In a single-phase e-meter, reversing the connections causes the e-meter to count in reverse, thereby leading to the total accumulated active energy readings becoming progressively smaller. These reversed connections can't be left in place, however, because that would obviously indicate tampering if the active energy readings become too small.

How to stop intrusive tampering

The first line of defence for these attacks is the meter case itself. Meter cases should be sealed to hamper access to the internal components. An intrusion detection system should also be added to determine if someone has opened or tried to open the case.

While this is a low cost method with minimal power consumption, it has significant limitations,

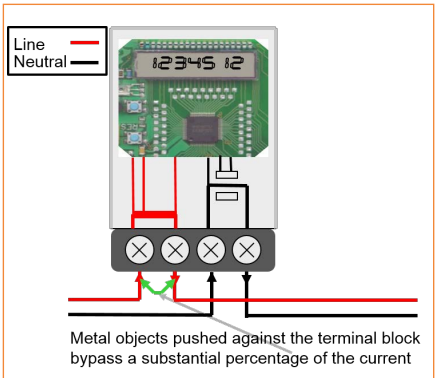

Figure 6. Current-bypass tampering

such as issues during the assembly and transportation of the meter, which could damage the intrusion detection system. Alternatively, the button activation tolerances may not actually press the button down at all, or become stuck or frozen in place.

To address these limitations, an alternative option is to use a contactless inductive switch like the Texas Instruments (TI) LDC0851. The LDC0851 can accurately detect the movement of a conductive object and provide a simple high/low digital signal if the metal target crosses a predetermined threshold.

The *Case Tamper Detection Reference Design Using Inductive Sensing* uses a LDC0851 switch, as well as an MSP430F67791A metrology microcontroller for low-power detection of the opening of both an e-meter's main cover and terminal block cover.

Conclusion

By following the anti-tampering techniques mentioned here, it's possible to thwart or at least mitigate meter tampering, thereby reducing inefficiencies and revenue losses when supplying electricity to utility customers.

Using anti-tampering techniques, it's possible to thwart, or at least mitigate, meter tampering, thereby reducing revenue losses when supplying electricity to utility customers.