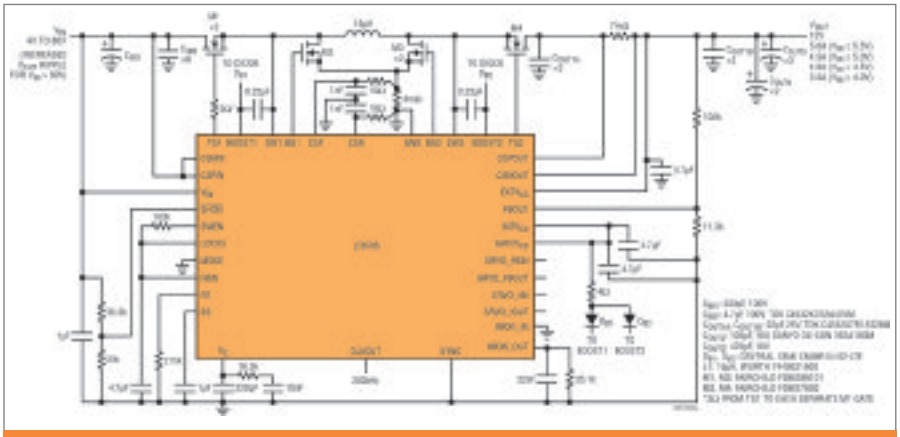

Figure 4. LT8705 detailed schematic for a fixed 12V output from a 4V to 80V input

Many transportation systems have a wide input voltage range due to the cold crank and load dump conditions commonly found in single or double battery vehicles. And, to complicate matters further, the desired output voltage can straddle this wide input voltage range. A system designer is therefore faced with the complex problem of having to design a solution that allows for a fixed output regardless of whether the input voltage is above, below or equal to the output voltage.

A common approach to solving this problem is to employ a SEPIC topology converter. However, this is a complicated design that requires two inductors and is usually not very space or conversion-efficient. As a result, Linear has designed an extensive family of 4-switch buck-boost controllers, which not only simplifies the design, but is both space and conversion-efficient, with power losses in the 5 to 7% range (depending on the input to output voltage range). The LT8705 shown in Figure 4 is an example of a 4V to 80V input-capable buck-boost controller, delivering a fixed 12V output that is commonly found in vehicular environments.

An alternative approach to dealing with an automotive cold crank condition is to employ a boost converter, followed by a buck converter. In this topology, the output of the boost converter from a single battery is set to a few volts above the battery's nominal voltage, and then, it is stepped down with a buck converter to the desired operating voltage – as required by the downstream electronics. Although it requires two converters, Linear has developed a device that combines both a boost controller and buck controller that can be either used independently, or in boost-buck follower: the LTC7813 (Figure 5 illustrates how this is achieved).

Low noise power management

'Electromagnetic radiation' (EMR), 'electromagnetic interference' (EMI) and 'electromagnetic compliance' (EMC) are all terms that pertain to energy from electrically-charged particles and the associated magnetic fields, which can potentially interfere with circuit performance and signal transmissions. With the proliferation of wireless communications, the plethora and pervasiveness of communication devices, and the growing number of communication methods, using more and more of the frequency spectrum (with some bands overlapping), electromagnetic interference is simply a fact of modern life. To mitigate the effects, many governmental agencies and regulatory organisations have set limits on the amount of radiation that can be emitted by communications devices, equipment and instruments.

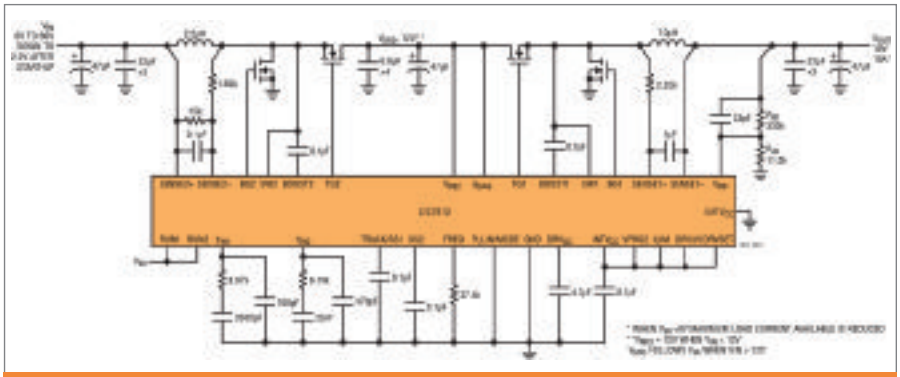

Figure 5. LTC7813 schematic is a dingle IC with a cascaded boost and buck regulator

Many transportation systems have a wide input voltage range due to the cold crank and load dump conditions commonly found in single or double battery vehicles. System designers are therefore faced with the problem of designing a solution that allows for a fixed output regardless of whether the input voltage is above, below, or equal to the output voltage.